Bronte Sensor Tap I Chrome

Model RBA1321-200

Materials & Features

Constructed from heavy duty DZR brass finished in chrome, the Bronte Sensor Tap includes an above the bench solenoid to simplify maintenance and installation. The IR sensor minimises common touchpoints between users. Suitable for public washrooms, offices, schools, shopping centres, stadiums, airports & accessible installations.

Technical Detail

Inlet:	½” BSP
Operating Pressure:	200-500 kPa
Max. Temp.:	45ºC
Flow Rate:	6 Star, 6LPM
Power Supply:	230VAC 50-60Hz / 6VDC, 1A

Installation

RBA1321-series requires a bunch cut out of ø35mm with a maximum bench thickness of 30mm.

Available Model

RBA1321-200 Bronte Sensor Tap I Chrome

Related Models

RBA1301-200 Coogee Sensor Tap I Basin Mount I Chrome
RBA1311-200 Coogee Sensor Tap I Wall Mount I Chrome
RBA1211-600 Formatta Sensor Tap I Basin Mount I Chrome

For best results, unit should be inspected and cleaned regularly as per the instructions in the RBA Product Warranty, Cleaning Care Guide, available on our websites.
Note: For Australia, Installation shall be in accordance with the PCA [Plumbing Code of Australia] and any relevant local authority requirements.
Important: Installation instructions and current rough-in details should be furnished with each fixture. Do not rough in without certified dimensions. Dimensions are subject to manufacturer’s tolerance of +/-10mm.

*All dimensions in mm

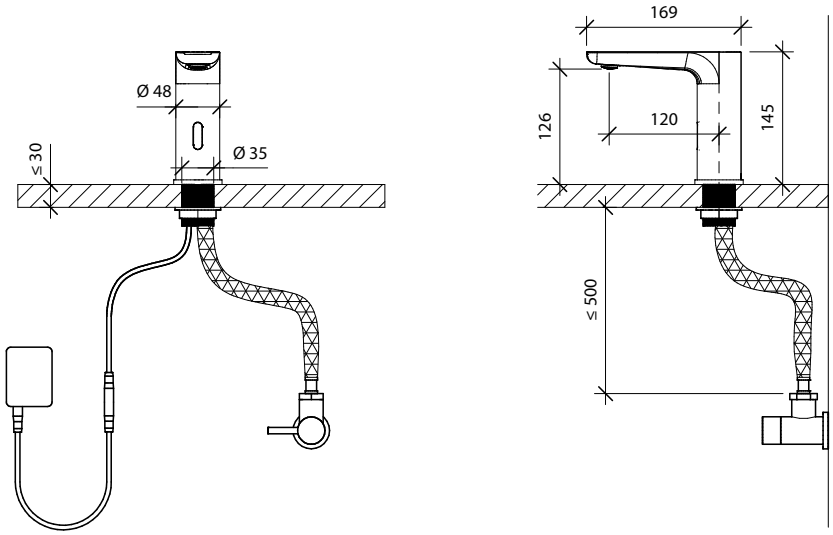

As improvements in the design and performance of RBA products are continuous, specifications may be subject to change without notice.
The illustrations and descriptions herein are applicable to production as of the date of this Technical Data Sheet. Revised 08/24 © 2024 by RBA Group TD/Model TD/Model RBA1321-200/0824

SYDNEY I MELBOURNE I BRISBANE I PERTH I AUCKLAND
Australia 1300 788 778 www.rba.com.au I **New Zealand** 0800 722 111 www.rbagroup.co.nz